DIMENSIONE D'INGOMBRO / *Overall dimensions*
POMPE CENTRIFUGHE AUTOADESCANTI
Self-priming centrifugal pumps
SERIE / *Series*

TBA 400 / 2

pompetravaini
CASTANO PRIMO (MILANO)

Versione MONOBLOCCO /M — *CLOSE - COUPLED /M construction*
Esecuzione /R — *Construction /R*

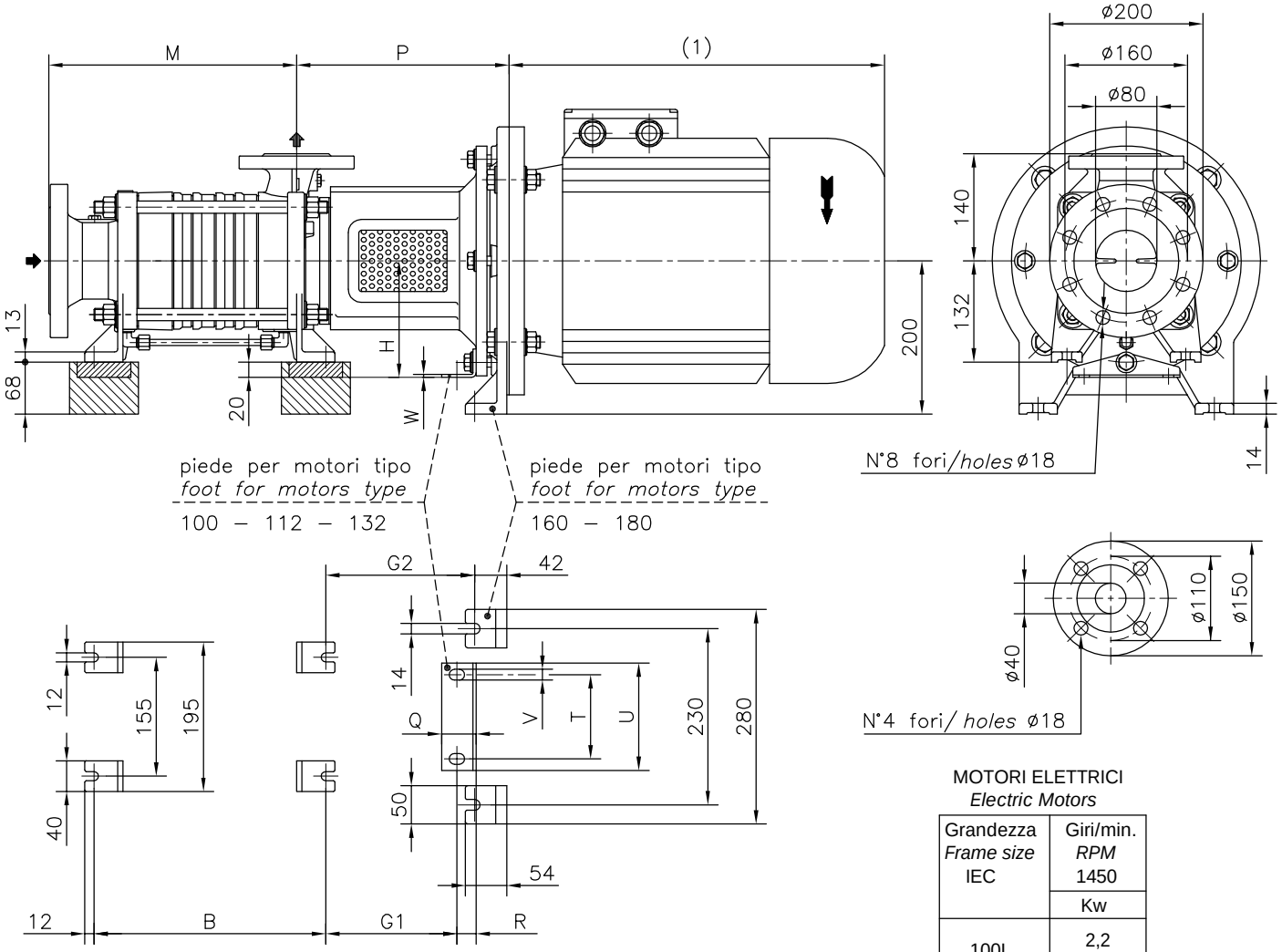

MOTORI ELETTRICI
Electric Motors

Grandezza *Frame size* IEC	Giri/min. *RPM* 1450 Kw
100L	2,2 3
112M	4
132S	5,5
132M	7,5
160M	11
160L	15
180M	185
180L	22

FLANGE: Dimensioni secondo UNI 2223 - 2229 PN40
FLANGES: Dimensions to UNI 2223-2229 NP40 standards

Disegno schematico. Dimensioni in mm con tolleranze secondo EN 735-1995.
Pesi indicativi in Kg, riferiti a pompe in ghisa escluso motore, non impegnativi.
Schematic drawing. Dimensions in mm with tolerances to EN 735-1995 standards.
Weights in Kgs, referred to pumps in cast iron without motor, not certified.
(1) Dimensioni in funzione della marca del motore installato.
(1) Not certified dimensions according to installed motor manufacture.

POMPA TIPO *Pump type*	Versione MONOBLOCCO *CLOSE-COUPLED construction*																										
			motore *motor* 100 - 112										motore *motor* 132										motore *motor* 160 - 180		
	M	B	P	G_1	H	R	T	U	V	Q	W	Peso *Weight*	P	G_1	H	R	T	U	V	Q	W	Peso *Weight*	P	G_2	Peso *Weight*
TBA 401	268	247	226.5	147	132	25	110	140	14	45	4	45	248	176	152	20	90	110	12	33	3	47	277	194	59
TBA 402	323	302	226.5	147	132	25	110	140	14	45	4	50	248	176	152	20	90	110	12	33	3	52	277	194	64
TBA 403	378	357	226.5	147	132	25	110	140	14	45	4	55	248	176	152	20	90	110	12	33	3	57	277	194	69
TBA 404	433	412	226.5	147	132	25	110	140	14	45	4	60	248	176	152	20	90	110	12	33	3	62	277	194	74
TBA 405	488	467	226.5	147	132	25	110	140	14	45	4	65	248	176	152	20	90	110	12	33	3	67	277	194	79
TBA 406	543	522	226.5	147	132	25	110	140	14	45	4	70	248	176	152	20	90	110	12	33	3	72	277	194	84
TBA 407	598	577	226.5	147	132	25	110	140	14	45	4	75	248	176	152	20	90	110	12	33	3	77	277	194	89
TBA 408	653	632	226.5	147	132	25	110	140	14	45	4	80	248	176	152	20	90	110	12	33	3	82	277	194	94

МЕГАТЕХНИКА ПРОМЫШЛЕННОЕ ОБОРУДОВАНИЕ
Москва, ул. Юности, д.5, стр. 4
Тел. (495) 988-78-29 Мегатехника.Москва
Единый телефон сервисной службы 8(800)100-77-83
Санкт-Петербург, ул. Софийская, д.17, оф. 311
Тел. (812) 331-70-11 Мегатехника.РФ
Единый телефон сервисной службы 8(800)100-77-83